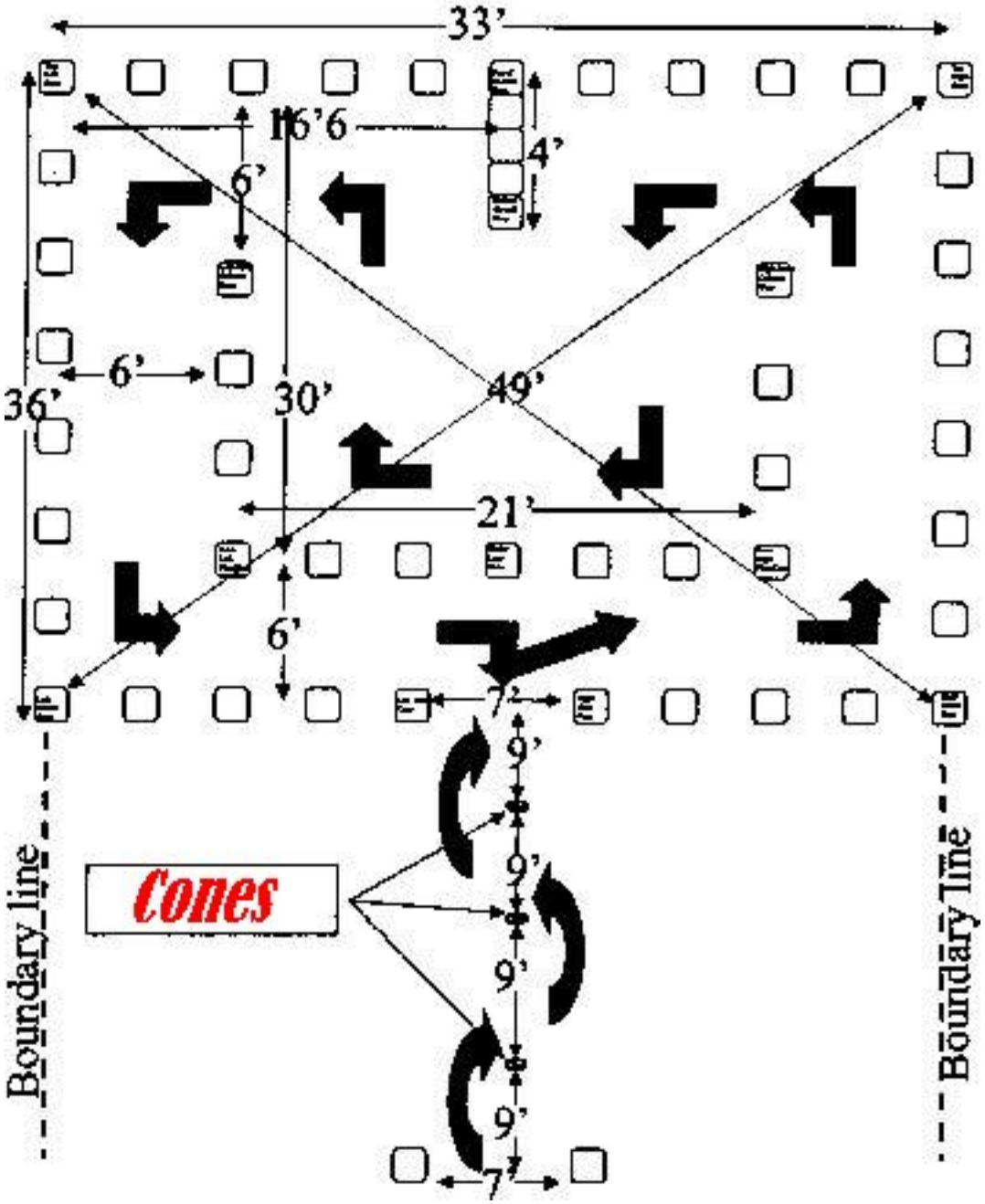The Pitchfork